TEAMSON DESIGN CORP.

Created by Us, Just for You

WARNING:

Small parts and sharp points may be present prior to assembly.

Care Instructions

To clean your product, use mild soap and water on a damp cloth. Do not use window cleaners or cleaning abrasives as they will scratch the surface and could damage the protective coating.

HARDWARES:

① 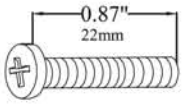

32PCS

② 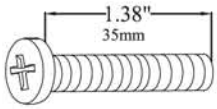

4PCS

PRODUCT PARTS:

ITEM NO: KYW-7624A

A 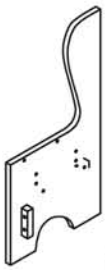 1PC	B 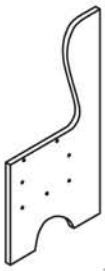 1PC	C 1PC	D 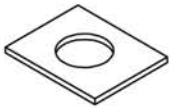 1PC	E 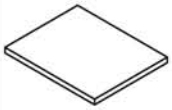 1PC	F 1PC
G 1PC	H 2PCS	I 1PC	J 1PC	K 1PC	L 1PC
M 1PC	N 2PCS	O 1PC	P 1PC	Q	

STEP 1

① 0.87" 22mm 6PCS

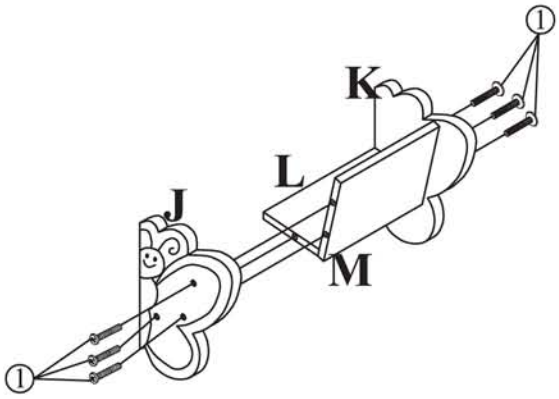

STEP 2

① 0.87" 22mm 6PCS

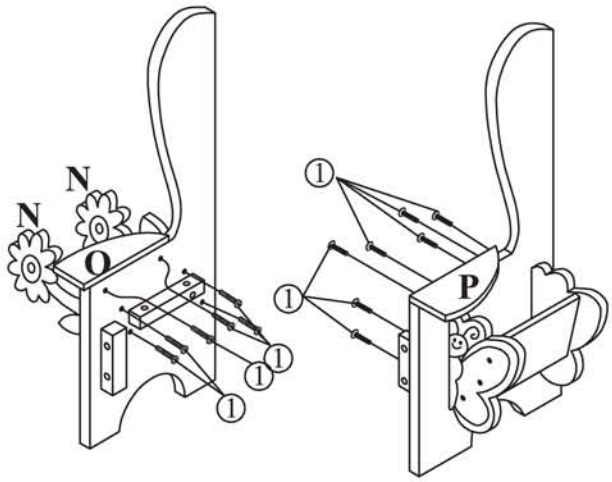

STEP 3

① 0.87" 22mm 6PCS

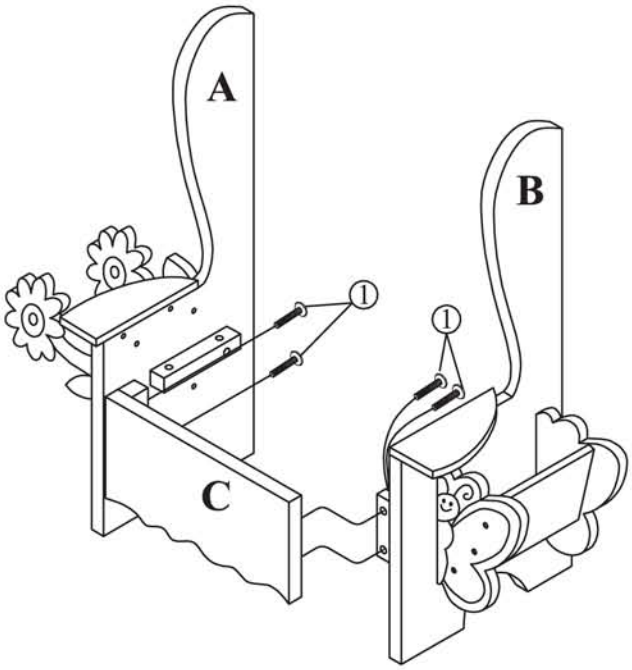

STEP 4

① 0.87" 22mm 6PCS

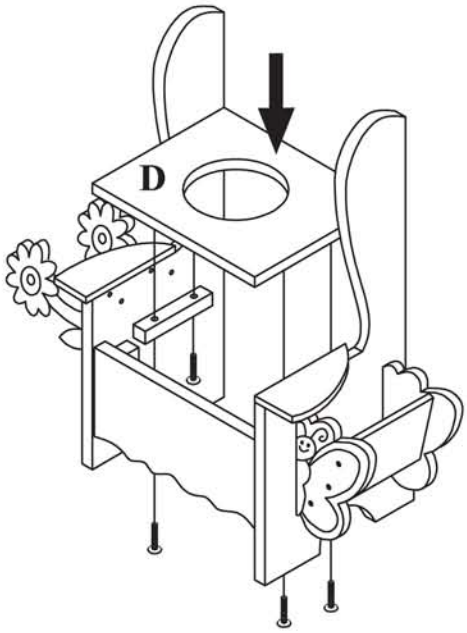

STEP 5

① 0.87" 22mm 6PCS

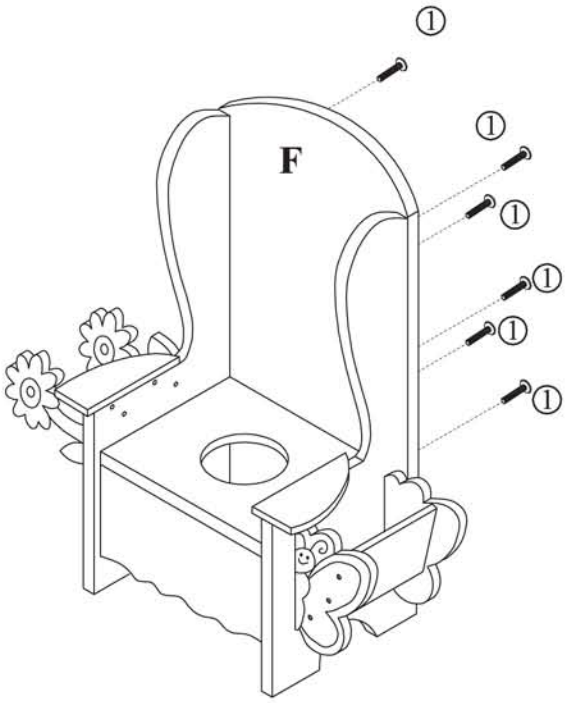

STEP 6

② 1.38" 35mm 4PCS

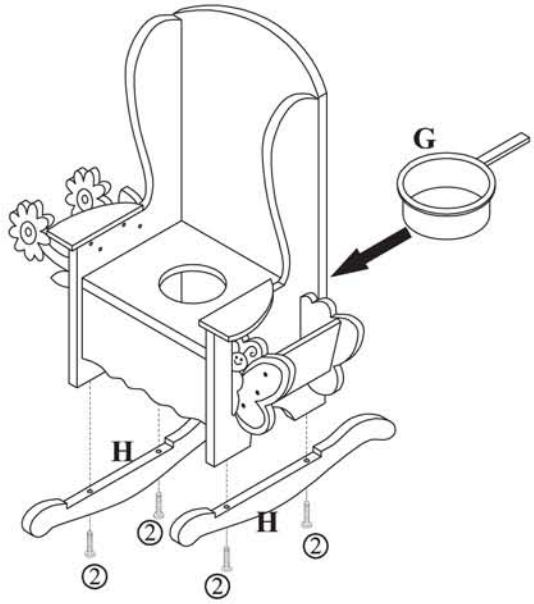

STEP 7

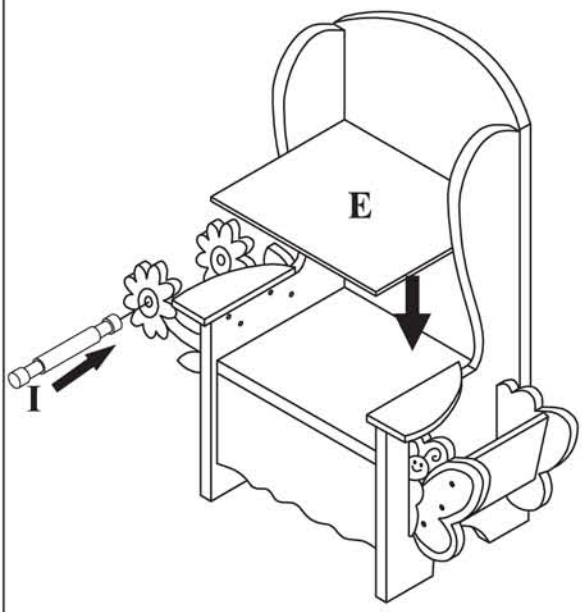

STEP 8

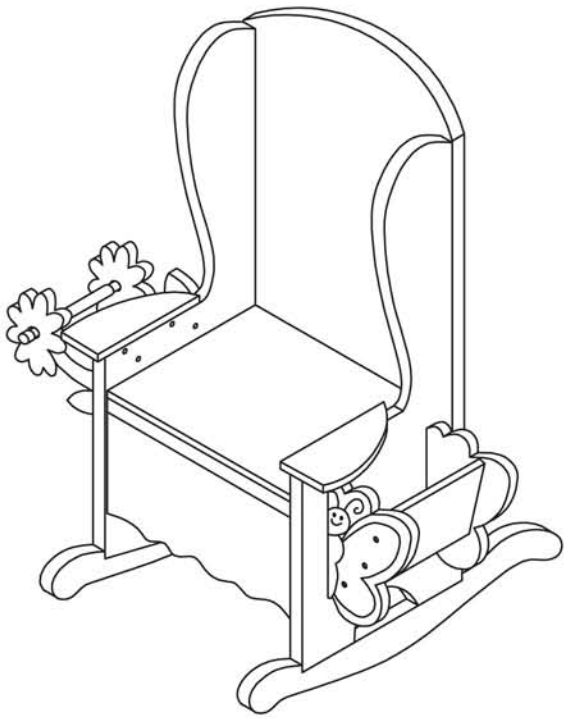

(Finished Product)

MADE IN CHINA